B48 ™

Expansion card with up to 48 bipolar ±10V ADC inputs

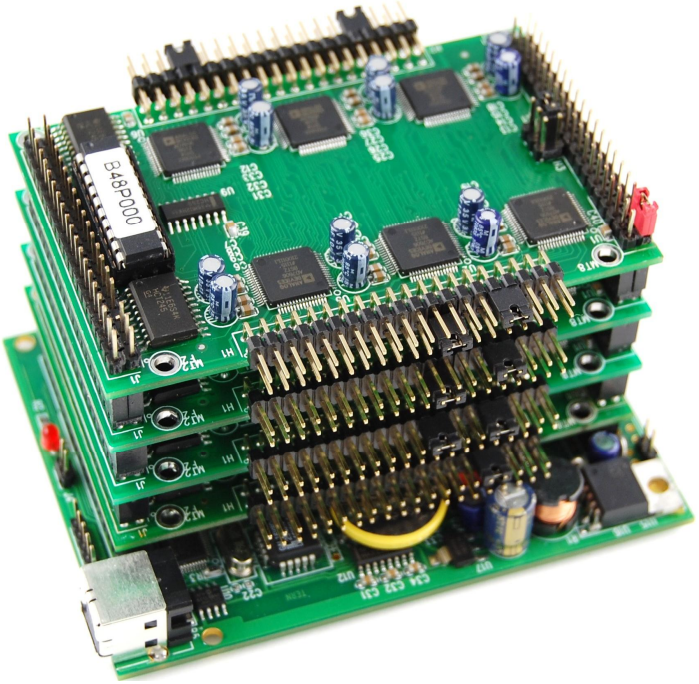

Technical Manual

TERN INC.
1950 5th Street, Davis, CA 95616, USA
Tel: 530-758-0180 Fax: 530-758-0181
Email: sales@tern.com http://www.tern.com

Version 2.0

March 6, 2012

1950 5th Street, Davis, CA 95616, USA
Tel: 530-758-0180 Fax: 530-758-0181
Email: ***sales@tern.com*** ***http://www.tern.com***

Important Notice

TERN is developing complex, high technology integration systems. These systems are integrated with software and hardware that are not 100% defect free. ***TERN products are not designed, intended, authorized, or warranted to be suitable for use in life-support applications, devices, or systems, or in other critical applications. TERN*** and the Buyer agree that ***TERN*** will not be liable for incidental or consequential damages arising from the use of ***TERN*** products. It is the Buyer's responsibility to protect life and property against incidental failure.
TERN reserves the right to make changes and improvements to its products without providing notice.
Temperature readings for controllers are based on the results of limited sample tests; they are provided for design reference use only.

Chapter 1: Introduction

1.1 Functional Description

The ***B48™*** is an expansion board designed to add a large number of 16-bit Bipolar ADC inputs to TERN controllers. Up to 6 AD7606 or AD7607 ADC chips can be installed on a single ***B48*** board.

The ADC (AD7606, 16-bit or AD7607, 14-bit) is a true bipolar, simultaneous sampling ADC which can accept 8 channels of true bipolar analog signals. The bipolar analog input range is software programmable to ±10V or ±5V.
Sharing a single "Conversion Start" hardware signal, all ADC inputs can be digitized simultaneously, with each group of 8 channel ADC data held in the FIFO in each ADC chip. Sampling throughput rates can be up to 200 kSPS for 8 analog inputs.
Each analog input contains second-order antialiasing filter, sample-and-hold amplifier and clamp protection tolerant up to ±16.5V. With 1M ohm analog input impedance, a 7000V ESD rating, and sustaining up to ±10 mA input current, the analog inputs are designed to survive in a rough industrial environment. The ***B48*** allows *simultaneous* sampling on all analog inputs.
Via a buffered 16-bit parallel bus interface, multiple ***B48*** boards can be stacked on a single host TERN controller. DMA operations can transfer ADC data to a host PC via USB at up to 8MB per second.
The ***B48™*** can interface to a TERN controller via J1, or J1+J2 headers. The ***B48™*** can be configured to be installed on the top, or the bottom of a TERN controller. Multiple B48 stack needs "Pass Through" connectors on J1 and J2. There are 4 PALs available, each providing a unique address, allowing stack of 4 B48s sharing one I/O select line. A stack of 8 uses two I/O select lines from the host controller.

Features and Options:

- 3.6 x 2.3 x 1”, 100 mA at 5V
- Mass 16-bit ADC expansion with stack of B48 boards
- Up to 48 analog inputs (6 AD7606 chips) per B48 board.
- Bipolar (±10V), Simultaneous Sampling ADC inputs
- Designed for rough industrial application with clamp protection
- Clamp protection with 1M ohm analog input impedance
- Sampling rates up to 200 kSPS for every 8 inputs

Physical Description

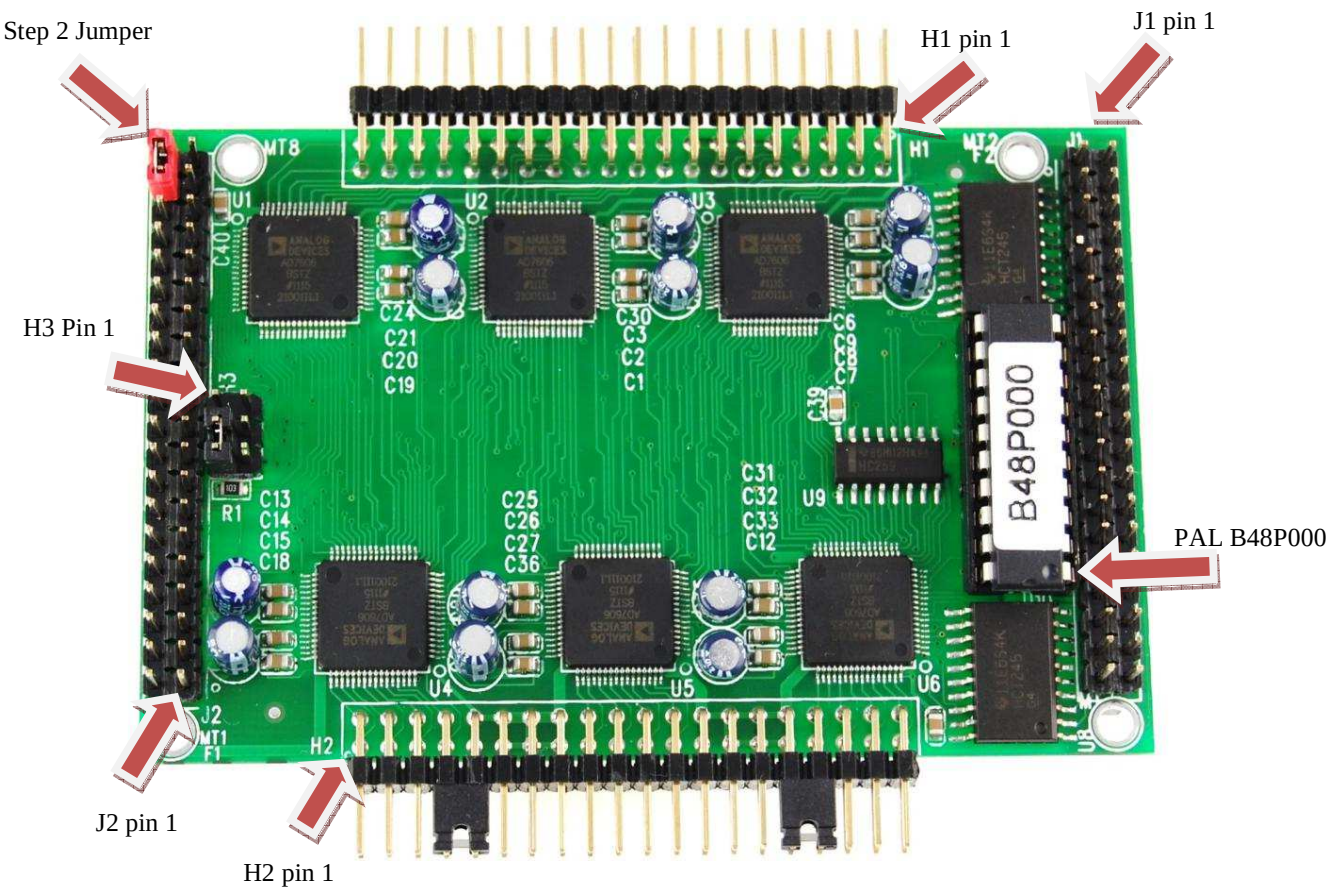

Chapter 2: Installation

2.1 Software Installation

Please refer to the Technical manual ñSoftware_Kit.pdfò on TERN CD under tern_docs\manuals\ for installing software and evaluation of TERN controllers.

2.2 Hardware Installation

The B48 is an expansion board built for TERN controllers. The B48 can work with most TERN controllers, including: B-Engine, 586- Engine, 586-Engine-P, A104, A104S, A-Engine, A-Engine-P, A-Engine86, A-Engine86-P, R-Engine, RA, RD, AE86-D, BirdBox-A, SmartLCD, SmartTFT, HD, U-Drive.

Hardware installation for the B48 consists of installing onto its host controller. The ***B48*™** interfaces with a TERN controller via the J1 and J2 address/data bus. The photo below shows a B48 is installed on top of an Ethernet-TFT (ET) via the J1 and J2 headers.

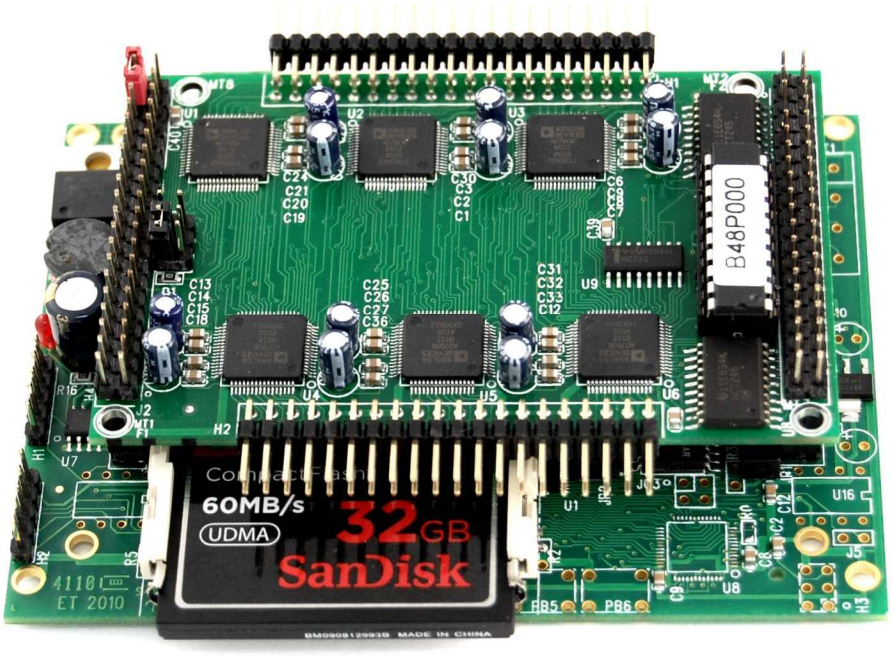

B48™ + ET

The B48 can also be stacked with up to 4 B48ôs for a single chip select line. Below shows 4 B48ôs stacked on a UB board.

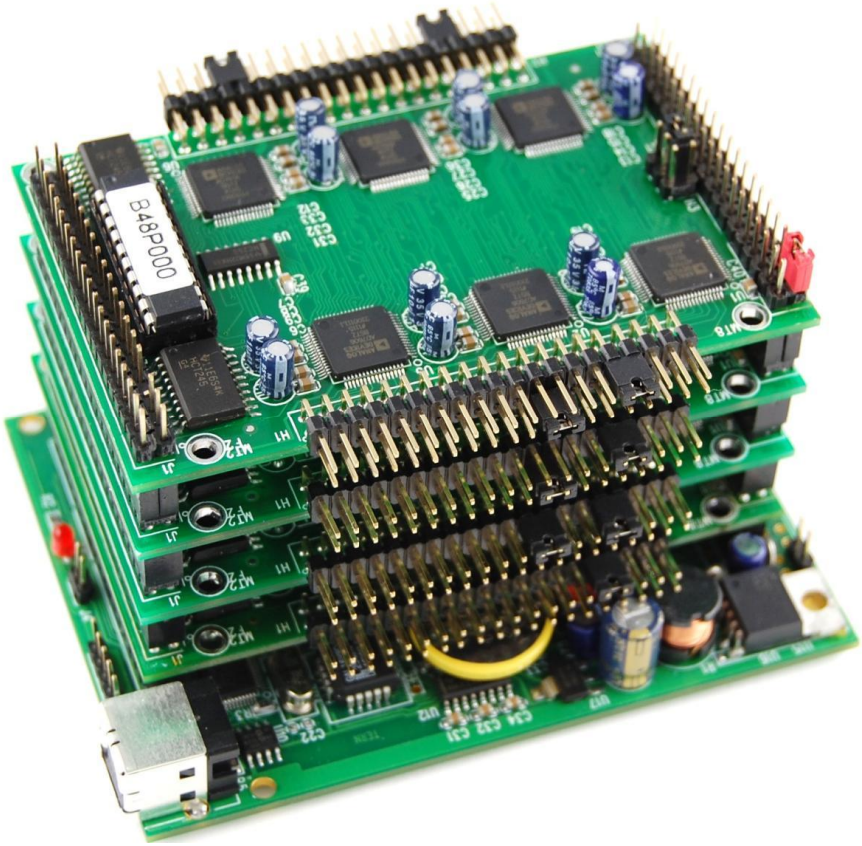

B48™ Stack + UB

Chapter 3: Hardware / Software

The B48™ is an expansion board that supports up to 48 bipolar ±10V 16-bit or 14-bit ADC inputs. B48 sample files and projects are in the folders listed below. Use the samples that correspond to your controller.

186 Controllers: c:\tern\186\samples\B48\

386 Controllers: c:\tern\386\samples\B48\

586 Controllers: c:\tern\586\samples\B48\

3.1 AD7606 16-bit parallel and AD7607 14-bit high speed ADC

The B48 supports up to six AD7606, 16-bit ADCs or six AD7607, 14-bit ADCs. Both ADC's can accept ±10V or ±5V true bipolar analog signals while sampling at throughput rates up to 200 kSPS for all 8 analog inputs. Each analog input contains second-order antialiasing filter, sample-and-hold amplifier and clamp protection tolerant up to ±16.5V. With 1M ohm analog input impedance, a 7000V ESD rating, and sustaining up to ±10 mA input current, the analog inputs are designed to survive in a rough industrial environment. The ***BE*** allows *simultaneous* sampling on all eight analog inputs. Using the 16-bit parallel DMA interface, the BE can transfer 8 channels of 16-bit (AD7606) or 14-bit (AD7607) data into the SRAM or CompactFlash with minimal software overhead.

3.2 Interface to TERN host controller via J1 and J2

The B48 is designed to interface to a host TERN controller via two 20x2 pin headers. All high speed address, data, and control lines are located on J1. Many PIO lines, interrupt lines and chip select lines are on J2.

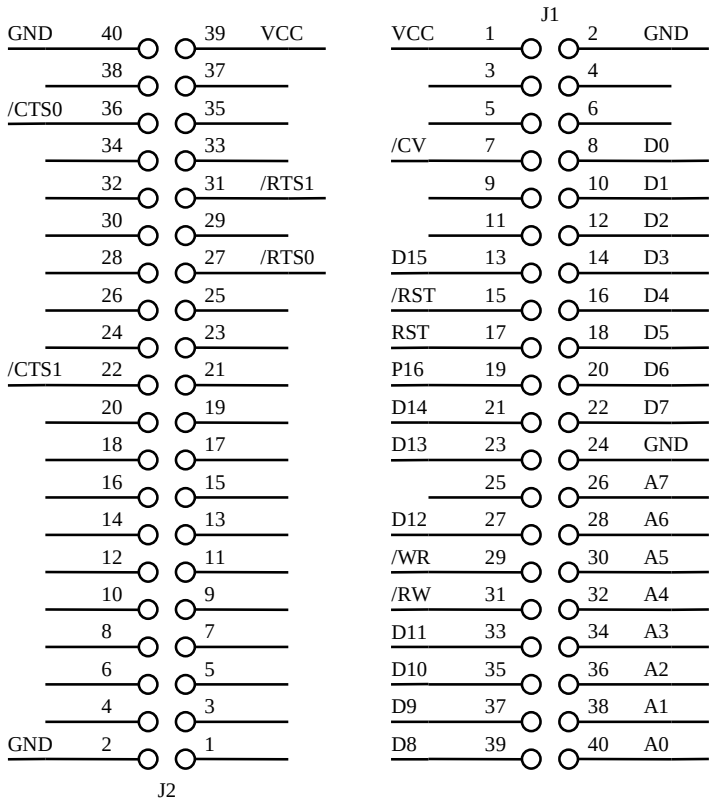

The signal names on J1 and J2 pin headers may be different on different host controllers, such as 586E, i386E, AE86. User needs to find out the active signal names and functions based on the location or the pin number on the J1 and J2 header of the host controller.

3.3 Header H1 and H2 - Analog Interface

Header H1 and H2 provide access to the 48 channels of ADC.

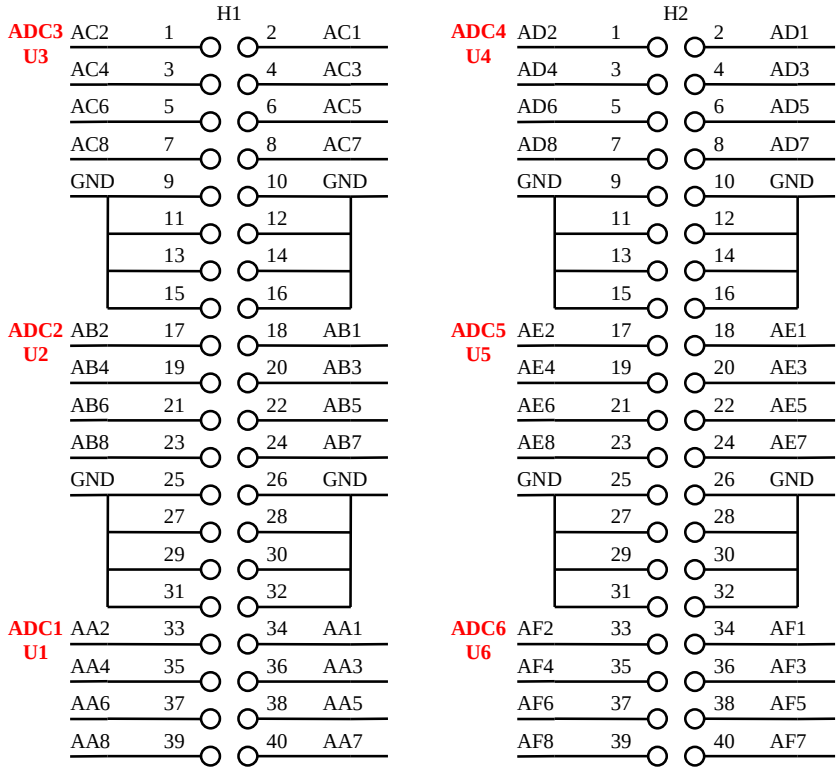

3.4 Chip Selects and Hardware Configuration Header

Header H3 selects the external CPU I/O chip select from J1 and J2. The chip select line is used by the PAL to select each on-board ADC. Different CPU controllers will require a different configuration. By default, H3.3 = H3.5 = J1.19 which sets the chip select /CS = P16 from the J1 header.

B48 uses four different PAL versions, B48P000, B48P040, B48P080, and B48P0C0 to support stacking multiple boards. Each PAL on the B48 has a unique address ID for selecting the on-board ADC. See the B48 sample programs for details on addressing multiple B48s.

H3

/CTS0	1		2	
/CS	3		4	/RTS1
P16	5		6	

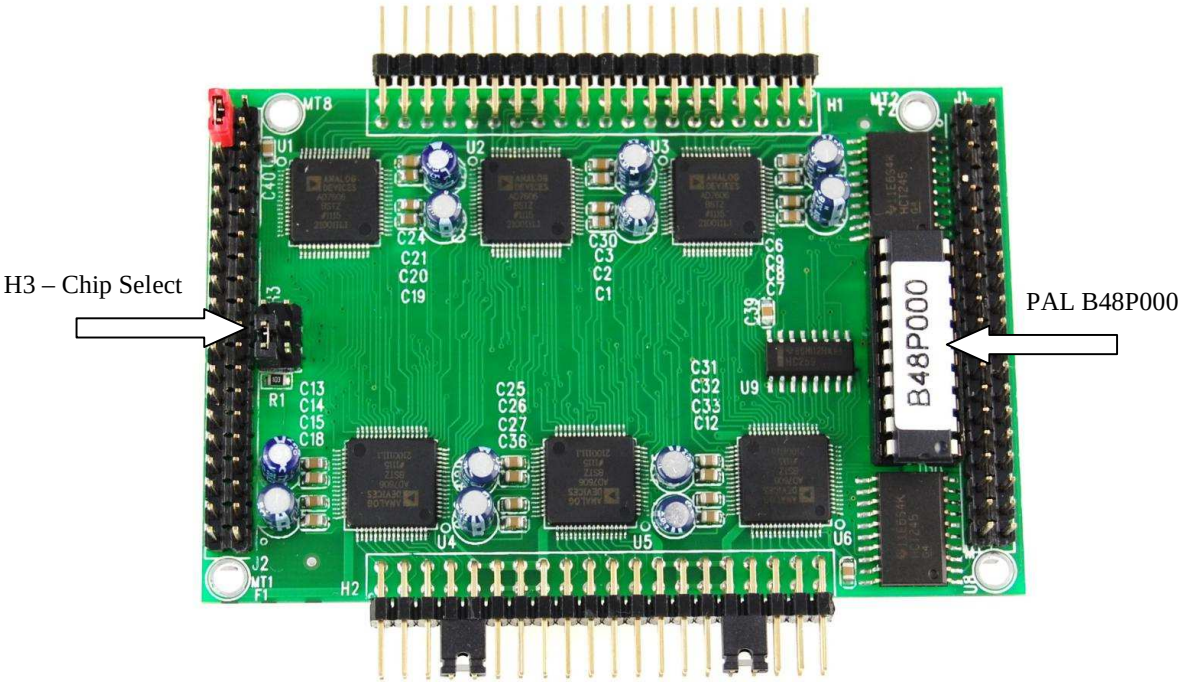

Appendix A: B48 Layout

Bipolar ±10V, 48 channels, 16-bit simultaneous ADC

All dimensions are in inches.

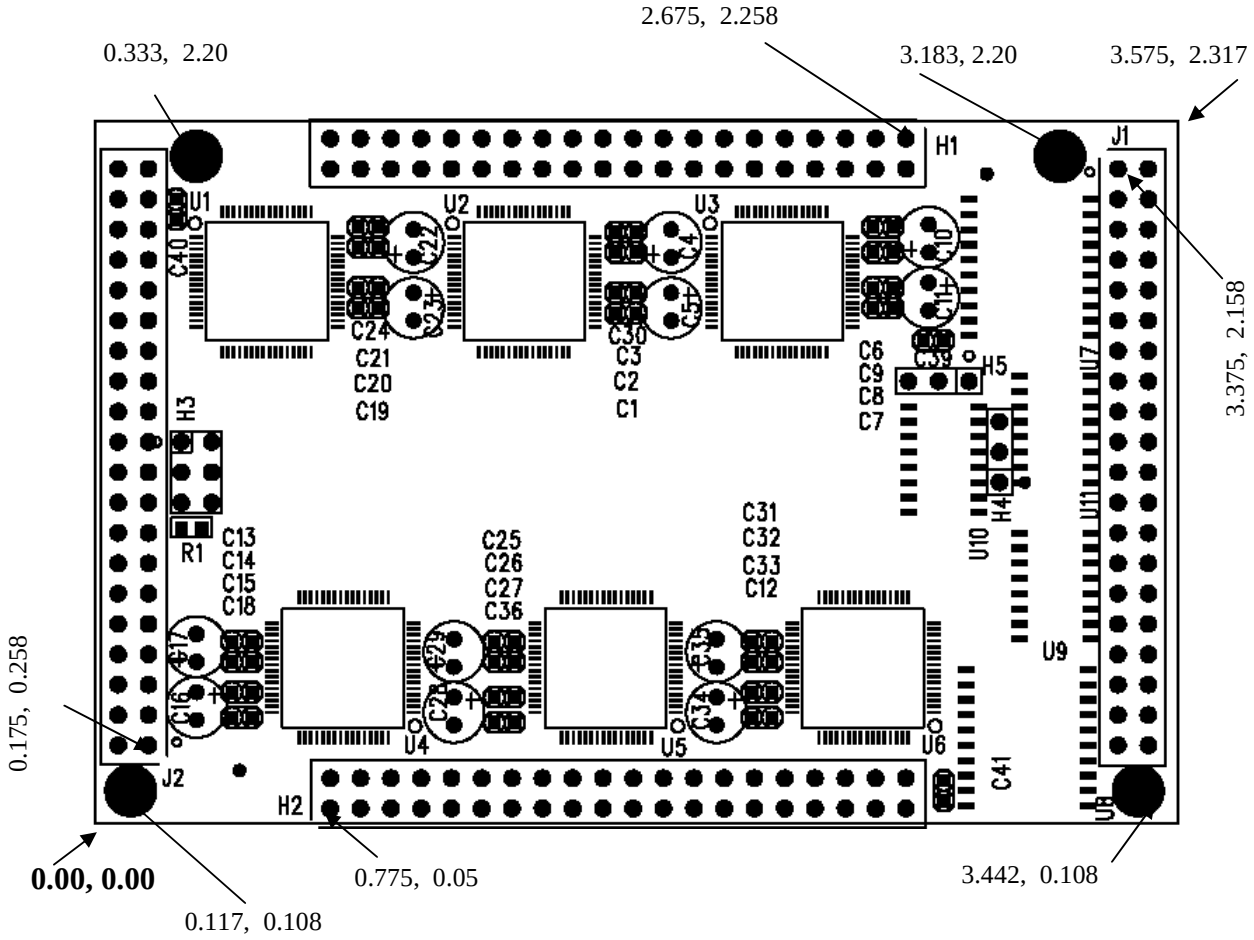

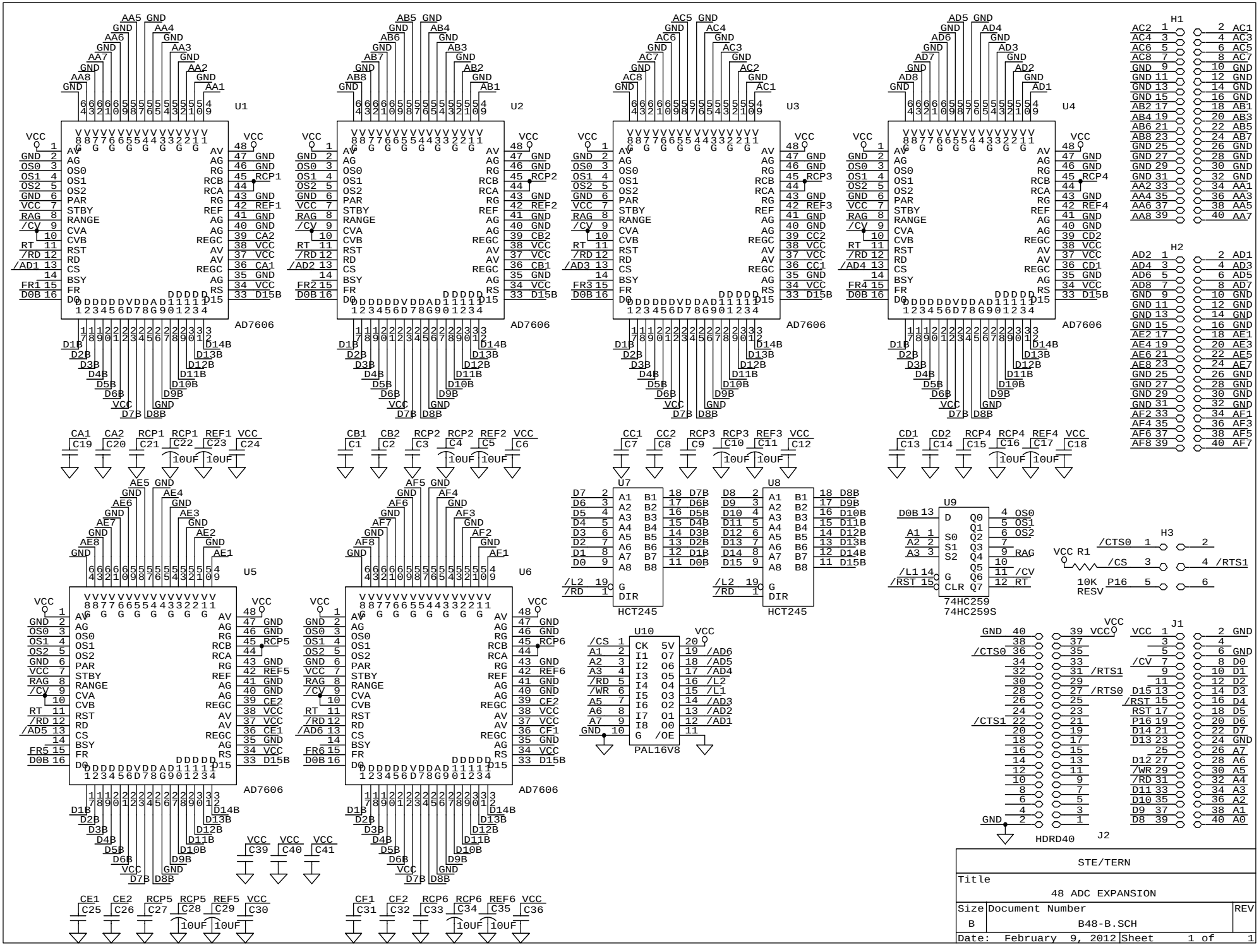
U1
U2
U3
U4
U5
U6
AD7606
U7
U8
HCT245
U9
74HC259
74HC259S
U10
PAL16V8
H1
H2
H3
J1
J2
HDRD40
10K
RESV
STE/TERN
Title
48 ADC EXPANSION
Size
B
Document Number
B48-B.SCH
REV
Date: February 9, 2012
Sheet 1 of 1