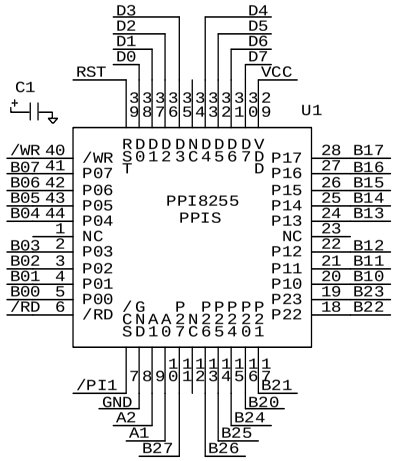

CABLE P50 J3 TO KPAD H5 IS 10X2 SPECILLY MADE (CABLE P50-KPAD).

P50 J3 SIDE IDE 20X2, KPAD H5 SIDE 10X2
USE ONLY P50 J3 PIN 1-16 (B00-B07, B20-B21) PLUS VCC AND GND
CONNECTOR OF CABLE IS ON TOP OF P50, BUT IS ON BOTTOM OF KPAD
VCC(J3.25) AND GND(J3.26) MUST BE TWISTED AND INSERTED FOR H5 PIN4 AND PIN3

8x2 KEYPAD CONTACTS

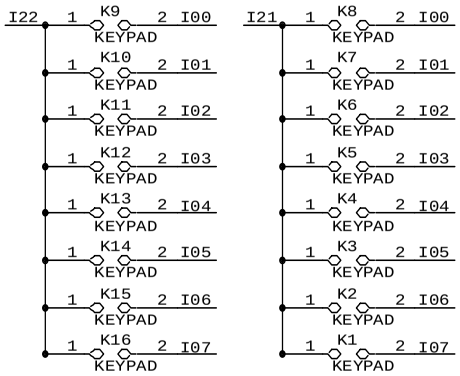

P50 PPI HEADER J3

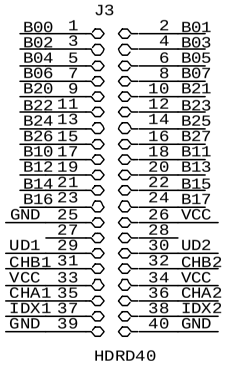

KPAD-IO H5 I/O PIN Interface

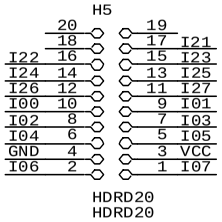

EXTERNAL I/O Interface
DRIVEN by AE/AE86 PPI

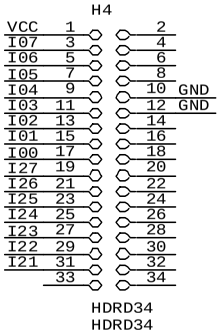

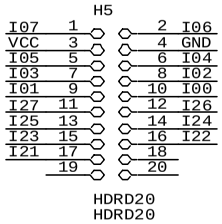

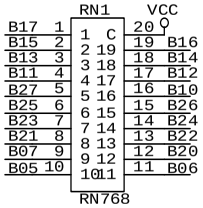

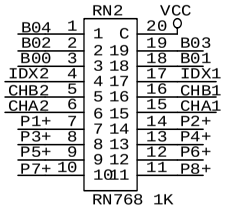

16x2 LCD HEADER

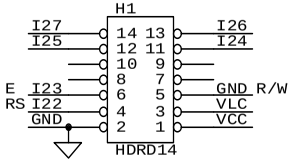

Contrast Adjust POT

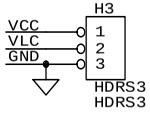

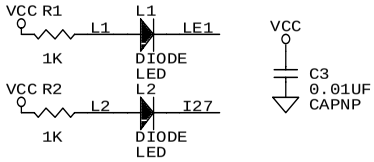

Title	P50 PPI I/O INTERFACE TO KPAD-IO	
Size B	Document Number P50-KPAD.SCH	REV
Date: November 14, 2001	Sheet 1 of 1	